SAVE PHACE™

The World Leader in Phace Protection!

Adjustable Radical Face Protector Owners Guide

Model

40VIZI2 and 40VIZI4

This is the safety alert symbol. It is used to alert you to potential personal injury hazards. Obey all safety messages that follow this symbol to avoid possible injury or death.

Mask, Lens Care, Lens Replacement and Headgear Assembly Instructions

© July 2016

40VIZI2-M0_072016

NOTICE:

For your SAFETY - PLEASE read and follow all of these instructions exactly. If you have problems understanding these instructions or have
questions, please call 1-866-783-3223.

Caution! Read and follow these instructions EXACTLY for care and cleaning of the lenses. These lenses are made from the highest quality polycarbonate known to man WITH a Military Grade Anti Scratch Coating AND the World's BEST Anti Fog Coating on the inside.

Remember, there is NO SUCH thing as a permanent Anti Fog coating. ALL anti fog coatings eventually come off. If you clean the lenses improperly, you'll increase the rate of deterioration or possibly wipe off the coatings. So, PLEASE follow these instructions every time you clean the non-ADF lens.

⚠ WARNING

SAFETY AND GENERAL INFORMATION

- Failure to comply with the enclosed may result in injury or blindness.
- WARNING: Risk of Ultraviolet Rays. Flying Particles. Wear Safety Goggles (User and Bystanders).
- Materials which come into contact with the wearer's skin could possibly cause allergic reactions to susceptible individuals.
- Scratched or damaged oculars (lenses) should be replaced.
- This is not a Paintball mask! It is a welding helmet.
- Toughened mineral filter oculars shall only be used in conjunction with a suitable backing ocular.

HELMET FIT INSTRUCTIONS

9 Point high quality headgear with 4 adjustment locations.

- For the top of the head adjustment; make the adjustment by aligning the strap to its proper place depending on the size of your head.
- For the helmet to fit tight PUSH IN and TURN the rear adjustment wheel on the back of the headgear.
- FOR FORWARD AND AFT ADJUSTMENTS - Loosen the headgear outer locking nuts and realign the headgear screws to the proper slots located INSIDE the Welding Helmet. Be sure the headgear is adjusted in the same position on both sides.

LENS CARE, INSTALLATION and REMOVAL INSTRUCTIONS (ADF LENS)

To Clean: Remove ADF Filter from ADF Lens holder by removing the 4 screws off the back ADF cover plate.

- Clean ADF Lens Holder with water only. Rinse ADF Lens holder under running water, shake off residue and dry off with a Micro Fiber or lint free soft cloth.

INSTALLATION and REMOVAL of ADF, FRONT PROTECTIVE CLEAR COVER LENS and REAR ADF PROTECTIVE COVER LENS

1. Remove the four finger screws and remove the REAR ADF Holder Plate to the Outer Lens.
2. Take out the old ADF Lens
3. When you replace the clear protective outer ADF Lens cover, squeeze the two tabs on the inside and press outward. The clear protective lens will pop out of the Outer Lens. Gently snap in a new one.
4. Replace the old ADF Filter with a new ADF that matches the ADF Holder Lens Shade as shown on the outside of the ADF Holder Lens.
5. Place the new ADF Filter with the Solar Panels facing the welding arc.
6. Place the rear ADF Holder over the ADF and install finger screws.
7. Do NOT over tighten finger screws.

USING the ADJUSTABLE ADF

Our advanced optical detection system monitors your welding process to ensure that your filter remains in the dark state in a wide range of arc-welding applications. Protection from harmful ultra-violet / infrared radiation is always present whether in the light or dark state. Your new filter energizes automatically as soon as the arc is struck. All models are solar powered so there are no on / off switches. The solar cell within the mask also recharges the onboard battery.

WELDING PROCESS	CURRENT AMPERES																											
	0.5	1	2.5	5	10	15	20	30	40	50	60	100	125	150	175	200	225	250	275	300	350	400	450	500				
Covered Electrode								Shade 9		Shade10			Shade11					Shade12				Shade13			14			
MIG Plate Welding												Shade10		Shade11				Shade12				Shade13			14			
MIG Sheet Metal												Shade10		Shade11			Shade12			Shade13		Shade14			15			
TIG						Shade 9		Shade10		Shade11			Shade12			Shade13					Shade14						
MAG										Shade10	Shade11		Shade12					Shade13			Shade14			Shade15				
Arc Gouging														Shade10		11		12		13		14		15				
Plasma Cutting													Shade11				Shade12				Shade13							
Plasma Welding	4	5	6	7	8	9	10		11		12			13				14						15				

Note: The above settings are meant to illustrate which welding applications are suggested for each configurable mode. Applications vary greatly so please experiment with the many available setting combinations in order to find the best combination of shade level, sensitivity and delay for your personal comfort and performance efficiency.

SELECTING THE SHADING LEVEL (Shade Control Knob)

The shading level can be set manually from 9 - 13. Consult the above table of recommended shading for the correct shading level for your work. Select a shading level by turning the shading dial until the arrow is pointing at the level you require.

SETTING THE DELAY/SWITCHING TIME (Delay Control Knob)

The delay/switching time (this means at that moment at which welding begins, the filter changes from light to dark) is set using the rotary knob. In the case of the “short” setting this is approx. 1/20000 of a second, “long“ is approx. 6/10 of a second.

SETTING the SENSITIVITY (SENSITIVITY CONTROL KNOB)

The rotary knob can be used to adjust the sensitivity to suit the welding process.

GRIND MODE ADJUSTMENT (GRIND CONTROL KNOB)

Turn grind mode switch on.

MORE INFORMATION

• This information is intended for ALL Save Phace RFP 1 (Radical Face Protector) models.
• This RFP is intended as a Welding Helmet and Grinding Mask as per ANSI and CE standards for low impact protectors.
• All parts on the RFP are replaceable. Please contact your local Save Phace Retailer/Distributor for these parts.
• For accessories, including magnification lenses and other cool accessories, please contact your local Save Phace Retailer/Distributor or log onto www.SavePhace.com
• All Save Phace ADF lenses have a 2 year warranty. You must register your product to obtain warranted replacement products.
• If you take care of this RFP it should last you a lifetime!
• CE EN 175:1997 –F means this product passed all of the requirements as stated by the European Counsel. The CE EN 175:1997 means this particular EN 175 was adopted in 1997. The –F means it passed the low impact standards.
• When transporting your product we recommend placing it in a nice Helmet Bag that comes with your purchase.
• Replacement parts on the RFP are recommended when broken, damaged or cracked. Otherwise, replace the RFP lenses are recommended once per year.
• This Product meets or exceeds ANSI Z87.1 Standards.
• This Product meets or exceeds CSA Standards.

NOTES

• When not using your RFP or RFP ADF lens, we recommend keeping them in a bag away from harmful chemicals or Radical heat.
• DO NOT USE ANY lens Cleaner, Windex®, Alcohol or Gasoline. Use of any of these or similar products will damage the coatings and lens.
• ALWAYS use OSHA/CE approved safety glasses when welding.

HEADGEAR ASSEMBLY INSTRUCTIONS

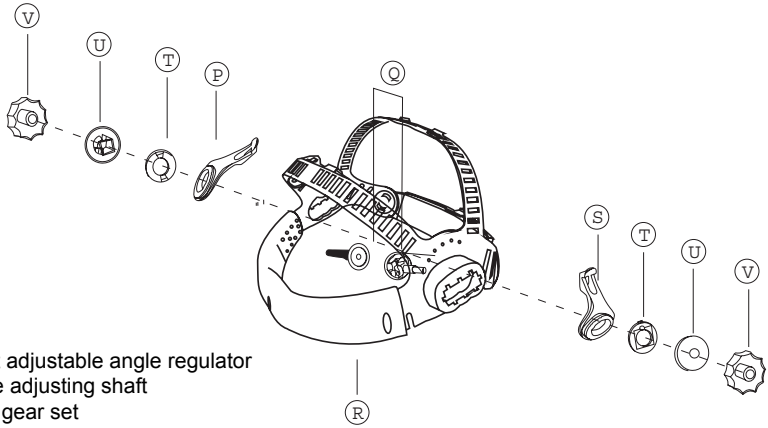

1. Right adjustable angle regulator
2. Angle adjusting shaft
3. Headgear set
4. Left adjustable angle regulator
5. Inside square washer
6. Outside square washer
7. Headband adjusting nut

• Headgear has left hand and right hand parts and tightens counter clockwise.
• If after assembly and installation into the helmet you cannot feel a strong ratcheting (click, click, click) of the adjusting knobs, you have installed some or all of the right and left hand parts on the wrong side.

ANSI
American National Standards Institute

Certified Product™
Australian Standard

40VIZI2
Auto Adjustable Specs:
ADF Size – 4.33″ x 3.54″
ADF Viewing Area – 3.82″ x 1.85″
Arc Sensors – 4
Light State – Shade 4
Shades – Shade 9-13
Time From Dark To Light – .1-.9 Adjustable
ADF Classification – 1/1/1/2
Grind Function – Yes
Grind Warning Indicator – Yes
Low Battery Warning Indicator – Yes
Sensitivity Internal Adjusted – Yes
Delay Internal Adjusted – Yes
Power On/Off – Fully Automatic
Power Supply – Solar Cells +
Lithium Ion Battery
Switching Time (ms) – .23 ms
Weight (oz) – 13 oz
Operating Temperature – 14° F to 149° F

40VIZI4
Auto Adjustable Specs:
ADF Size – 4.33″ x 3.54″
ADF Viewing Area – 3.82″ x 1.85″
Arc Sensors – 2
Light State – Shade 4
Shades – Shade 9-13
Time From Dark To Light – .1-.9 Adjustable
ADF Classification – 1/1/1/2
Grind Function – Yes
Grind Warning Indicator – Yes
Low Battery Warning Indicator – Yes
Sensitivity Internal Adjusted – Yes
Delay Internal Adjusted – Yes
Power On/Off – Fully Automatic
Power Supply – Solar Cells +
Lithium Ion Battery
Switching Time (ms) – .23 ms
Weight (oz) – 13 oz
Operating Temperature – 14° F to 149° F

REPLACEMENT PARTS

Not all components are replacement items, but are illustrated as a convenient reference of location and position in the assembly sequence. When ordering parts, please give the Model number and parts description. Call or write for current pricing:

SFA Companies 10939 N. Pomona Ave. Kansas City, MO 64153, U.S.A.
E-Mail: savephacesupport@sfacompanies.com Tel: (866) 783-3223 Fax: (816) 891-6599

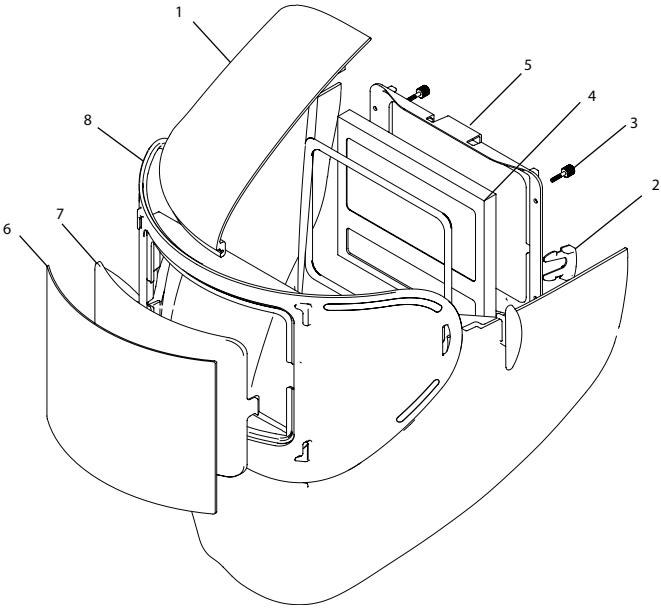

Item	Part Number 40VIZI2	Part Number 40VIZI4	Description	Qty.
1	N/A		Mask	1
2	3011667		Lens Key and Anchor (Left & Right)	2
3	3012053		Screw	4
4	3011568	3011575	ADF	1
5	3011391		Back Cover	1
6	3011582		Protective Lens	1
7	3011599		Front Cover Lens	1
8	3011407		ADF Holder	1
9	3011544		Halo (Not Shown)	1

NOTES:

ONE YEAR LIMITED WARRANTY

SavePhace products undergo a strict quality control inspection for workmanship, function, and safety before leaving the factory. From the date of purchase, **SavePhace** will warranty or repair it's products for: one (1) year on its helmet and two (2) years on its the ADF against defects in parts and workmanship. We have a general warranty claim form along with potential request of proof of purchase.

In the unlikely event a problem is experienced with any of our products, a return merchandise authorization (RMA) number must be obtained by contacting us toll-free at 866-783-3223. Each product to be returned must have the item number, description of the problem and proof of purchase. All returns must have a RMA number marked clearly on the outside of the shipping box, and printed RMA form enclosed inside the box. Only SavePhace can determine if product can be repaired or must be replaced.

Except where such limitations and exclusions are specifically prohibited by applicable law, (1) THE CONSUMER'S SOLE AND EXCLUSIVE REMEDY SHALL BE THE REPAIR OR REPLACEMENT OF DEFECTIVE PRODUCTS AS DESCRIBED ABOVE. (2) **SavePhace**. SHALL NOT BE LIABLE FOR ANY CONSEQUENTIAL OR INCIDENTAL DAMAGE OR LOSS WHATSOEVER. (3) ANY IMPLIED WARRANTIES, INCLUDING WITHOUT LIMITATION THE IMPLIED WARRANTIES OF MERCHANTABILITY AND FITNESS FOR A PARTICULAR PURPOSE, SHALL BE LIMITED TO ONE YEAR, OTHERWISE THE REPAIR, REPLACEMENT OR REFUND AS PROVIDED UNDER THIS EXPRESS LIMITED WARRANTY IS THE EXCLUSIVE REMEDY OF THE CONSUMER, AND IS PROVIDED IN LIEU OF ALL OTHER WARRANTIES, EXPRESS OR IMPLIED. (4) ANY MODIFICATION, ALTERATION, ABUSE, UNAUTHORIZED SERVICE OR ORNAMENTAL DESIGN VOIDS THIS WARRANTY AND IS NOT COVERED BY THIS WARRANTY.

Some states do not allow limitations on how long an implied warranty lasts, so the above limitation may not apply to you. Some states do not allow the exclusion or limitation of incidental or consequential damages, so the above limitation or exclusion may not apply to you. This warranty gives you specific legal rights, and you may also have other rights, which vary from state to state.