HEIN-WERNER AUTOMOTIVE®

55-Ton Rolling Head Press

Operating Instructions & Parts Manual

Model Numbers
HW93410, HW93411, HW93412
HW93413, HW93414, HW93415

Capacity
55 Tons

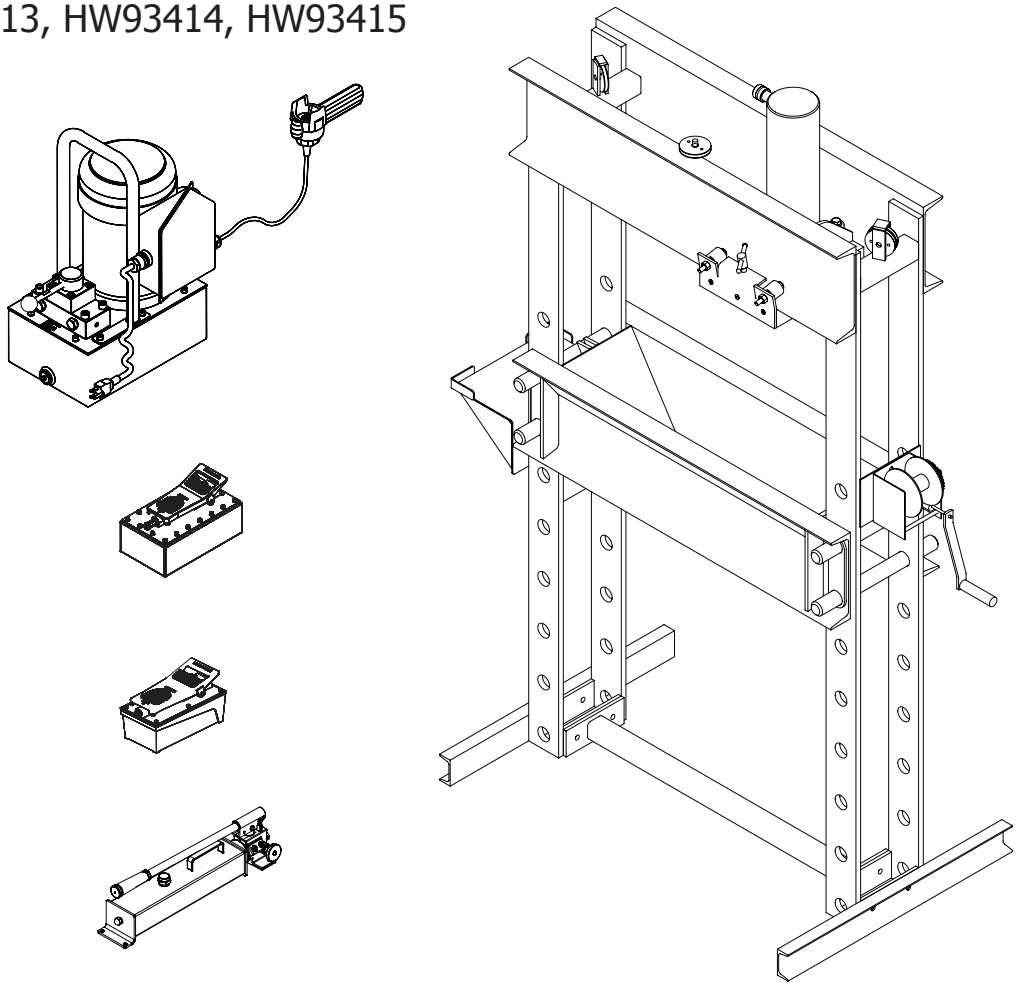

This is the safety alert symbol. It is used to alert you to potential personal injury hazards. Obey all safety messages that follow this symbol to avoid possible injury or property damage.

SFA Companies
10939 N. Pomona Ave. Kansas City, MO 64153
customerservices@heinwerner-automotive.com

Read this manual and follow all the Safety Rules and Operating Instructions before using this product

HW93415-M0_102012

⚠ WARNING

- *Study, understand, and follow all instructions before operating the device.*
- *Do not exceed rated capacity.*
- *Prior to use, make sure press is securely anchored.*
- *The press shall be installed and operated in accordance with federal (OSHA), state and local safety standards.*
- *Operators and observers shall wear eye protection that meets ANSI Z87.1 and OSHA standards.*
- *Keep hands, arms, feet and legs out of the work area. Accidental slippage can result in personal injury.*
- *Use appropriate guarding to contain any pieces that may break or fly apart when applying force.*
- *Use only press accessories having a capacity rating equal to or greater than the capacity of the press.*
- *Verify lift cables are slack before pressing on the bolster.*
- *Avoid off-center loads.*
- *No alterations shall be made to this product.*
- *Failure to heed and understand these instructions and markings may result in personal injury, property damage or both.*

SAFETY AND GENERAL INFORMATION

Save these instructions. For your safety, read, understand, and follow the information provided with and on this device before using. The owner and/or operator shall have an understanding of the device, its operating characteristics and safety operating instructions before operating the equipment. The owner and/or operator shall be aware that use and repair of this product may require special skills and knowledge. Instructions and safety information shall be read to and discussed with the operator in the operator's native language, making sure that the operator comprehends their contents, before use of this equipment is authorized. If any doubt exists as to the safe and proper use of this device, remove from service immediately.

Inspect before each use. Do not use if abnormal conditions such as cracked welds, damaged, loose or missing parts are noted. Any equipment that appears damaged in any way, is found to be worn, or operates abnormally shall be removed from service until repaired. If the equipment has been or is suspected to have been subjected to an abnormal load or shock, immediately discontinue use until inspected by a factory authorized repair facility (contact distributor or manufacturer for list of authorized repair facilities). It is recommended that an annual inspection be made by an authorized repair facility. Labels and Operator's Manuals are available from the manufacturer.

PRODUCT DESCRIPTION

Hein-Werner Shop Presses are designed for automotive, truck, implement, fleet, and industrial repair shops where pressing, bending, straightening, forming, or holding is required. Each press includes a cylinder, a pump, and winch assembly which provides safe and fast way to raise and lower the bed frame, and a pressure gauge for monitoring the applied force. Typical applications include installation and removal of alternator and power steering pump bearings, axle bearings, transmission bearings, seals, driveshaft bearings and u-joints. It is not intended for use as an assembly table or as a fixture stand used to secure large, final assembly components. Refer to the BVA Cylinder and Pump manuals for more information.

⚠ **WARNING:** *To reduce the risk of personal injury and/or property damage, ensure that the rated working pressure of each pressurized attachment is equal to or greater than the rated working pressure developed by the hydraulic pump.*

NOTICE: *The power retract feature of the HW93415 Shop Press is not intended to be used under load. Never pull or raise a workpiece with the power retract feature.*

SPECIFICATIONS

Press Model	Rated Capacity	Cylinder Model	Pump Model/Type	Press Bed Depth (front to back)	Press Bed Width (side to side)	Press Size (H" x W" x L")	Min. Work Height (in.)	Max. Work Height (in.)
HW93410	55 Ton	H5506	P2001	14-7/8"	35-1/2"	79-1/8 x 56 x 30	14	55-1/2
HW93411			PA2000					
HW93412			PE0501T					
HW93413		H5513	PA3801					
HW93414			PE0501T					
HW93415		HD5513	PEM0501T					

Cylinder

Cylinder Model	Rated Capacity (ton)	Stroke (in.)	Effective Area (in^3)	Oil Volume (in^3)	Min Height (in.)	Max Height (in.)	Outer Dia. (in.)	Ram Dia. (in.)	Saddle Dia. (in.)	Collar Thread (in.)	Collar Thread Length (in.)
H5506	55	6.22	10.99	68.34	11.14	17.36	5	3.15	2.76	5"-12	2.17
H5513		13.27		145.77	18.15	31.42					
HD5513	55	13.19		144.94	20.04	33.23	5	3.74			1.73

Manual Pump (Hand pump)

Hand Pump Model	Usable Oil Volume (in^3)	Pressure Rating (psi)		Oil Displacement (in^3)		Oil Outlet Port Thread	Weight (lbs)
		1st Stage	2nd Stage	1st Stage	2nd Stage		
P2001	122	200	10,000	0.81	0.14	3/8"-18 NPTF	24.2

Air Pump

Air Pump Model	Usable Oil Volume (in^3)	Pressure Rating (psi)	Oil Output Flow Rate (in^3/min)		Input Air Pressure Range (psi)	Weight (lbs)
			No Load	Load		
PA2000	122.1	10,000	65	12	110 - 175	20.1
PA3801	231.9			11		27.1

Electric Pump

Electric Pump Model	Reservoir Capacity (gal)	Pressure Rating (psi)		Oil Output Flow Rate (in^3/min)		Valve Type	Motor Size (hp)	Current Draw (A)	Motor Voltage (V)	Weight (lbs)
		1st Stage	2nd Stage	1st Stage	2nd Stage					
PE0501T	1	350	10,000	293	18	3-way, 3-pos	0.5	9	115/125	60
PEM0501T	1					4-way, 3-pos				

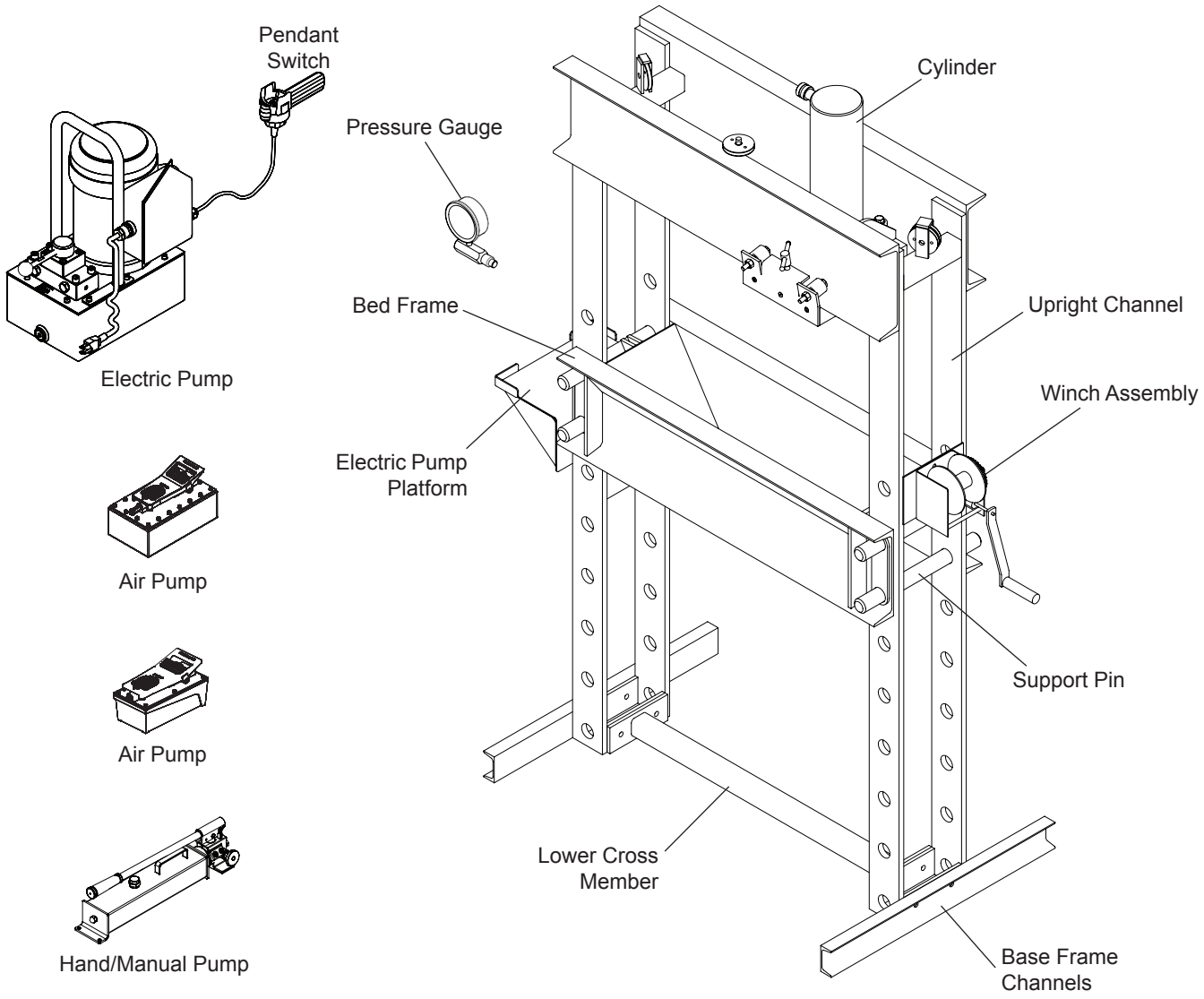

Figure 1 - 55 Ton Shop Press nomenclature

BEFORE USE

1. Before using this product, read the operator's manual completely and familiarize yourself thoroughly with the product, its components and recognize the potential hazards associated with its use.
2. Inspect before each use. Do not use if bent, broken or cracked components are noted. Check for and tighten any loose components.
3. Verify that the product and the application are compatible, if in doubt call Hein-Werner Technical Service (816) 891-6390.

ASSEMBLY

1. Adjust Bed Frame to lowest position and slacken Winch Cable.
2. Install Winch Assembly to press using (3) 3/8" bolts, washers and nuts.
3. Secure Cylinder to Cylinder Adapter Plate, and mount Adapter Plate to upper cross member using (4) 1/2" bolts and washers.

NOTICE: *Cylinder comes with carrying handles. Loosen Allen head attachment screws to remove handles.*

4. Attach Base Frame Channels to Upright Channels with (4) 1/2" bolts and nuts.
5. Attach Lower Cross Member to Upright Channels with (4) 1/2" bolts and nuts.
6. *For Electric Pumps only:* Adjust the Pump Platform to desire height and secure with (4) 3/8" bolts, nuts & washers provided.
7. Connect the Pressure Gauge and the Hydraulic Hose to the Gauge Adapter, then connect the Gauge Adapter to Pump.

NOTICE: *Use thread tape or compound on all threaded hose connections.*

8. Place pump on pump bracket and connect other end of hydraulic hose to cylinder.

CAUTION: *Before disassembling, adjust bed frame section to lowest position.*

OPERATION

Refer to **BVA Owner's Manual** for the cylinder and pump operation.

WARNING: *Using a shop press can present a projectile hazard. Ensure workpiece is centerloaded and secure. Reduce risk of flying debris by following all operating instructions. Know your press and hazards associated with its use. Keep hands and feet from bed area at all times.*

WARNING: *Risk of serious eye injury from projected debris. Reduce risk by wearing safety goggles when working with or around press.*

1. Use winch to raise/lower bed frame to desired height and insert one support pin. Readjust bed frame until ALL support pins can be installed.

WARNING: *Use all four support pins to hold press bed*

2. Slacken cable until bed frame is resting fully on support pins.
3. Secure workpiece to bed frame using every precaution necessary to ensure safety and prevent property damage.
4. Loosen both screw clamps and position cylinder carriage directly over workpiece. *Avoid off-center loads.* Retighten screw clamps.
5. Pump operation:
   a) *Manual pump*: Close release valve by turning clockwise, pump handle to extend cylinder ram. To retract, open pump release valve.
   b) *Air pump*: Connect to suitable air supply, press foot pedal to extend cylinder ram. To retract, activate release valve by pressing raised, stirrup shaped portion of foot pedal.
   c) *Electric pump*: Engage ON/OFF switch to start electric pump, then let pump idle for a few minutes before operating cylinder. Use control valve knob to extend or retract cylinder ram.

WARNING: *Monitor the pressure gauge while in operation and never leave loaded press unattended.*

NOTICE: *Never operate pump with hose disconnected from cylinder. If operated in this condition, the hydraulic hose and connections become pressurized, increasing burst hazard.*

6. Apply load to workpiece - **do not overload.**
7. Stabilize workpiece so that it will not inadvertently fall from bed frame once load is removed.
8. Once cylinder has fully retracted, remove workpiece. Reposition cylinder carriage only after cylinder has been retracted.

NOTICE: *To protect your cylinder, cease pump operation after cylinder ram is fully extended or retracted.*

MAINTENANCE

Reference cylinder and pump manuals for maintenance and adding/changing hydraulic oil instructions. For best results, change oil once per year. Use premium quality hydraulic oil.

Lubrication

A periodic coating of light lubricating oil to pivot points and hinges will prevent rust and assure assemblies move freely.

Storage

Depressurize the hydraulic system, disconnect hydraulic hose and lower the bed frame to lowest position. Disconnect both hoses on Double Acting Shop Presses.

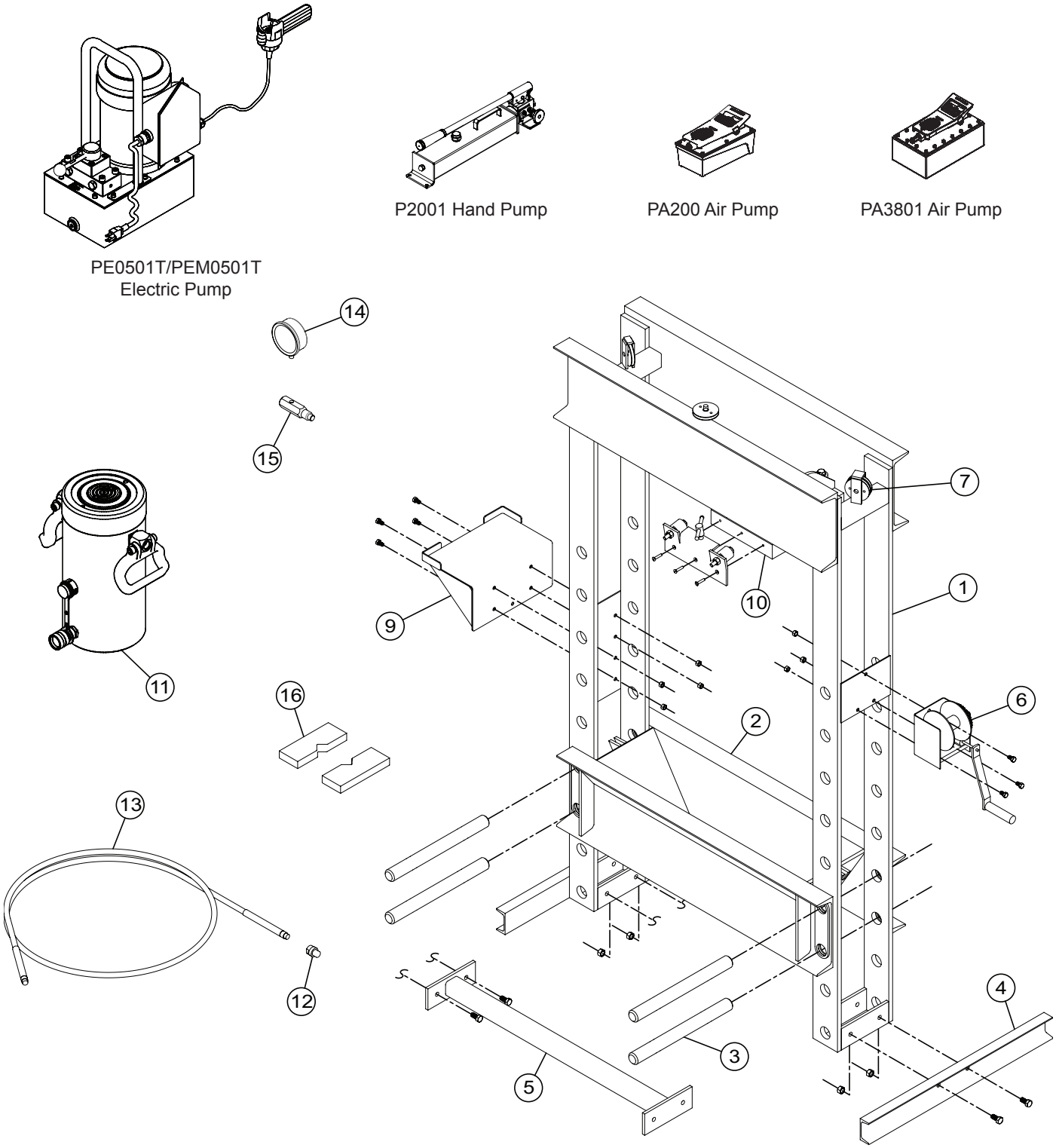

Figure 3: Replacement Parts Illustration for Moveable Ram Shop Press

REPLACEMENT PARTS (ref. illustration on pg. 6)

Not all components of this press are replacement items, but are illustrated as convenient reference for location and position in the assembly sequence. When ordering parts, give Model number, serial number and parts description. Call or write for current pricing: Hein-Werner Customer Support, 10939 N. Pomona Ave. Kansas City, MO 64153; Tel: (816) 891-6390; customerservices@heinwerner-automotive.com. For cylinder and pump service parts, refer to BVA owner's manuals.

Replacement Parts for 55-ton Shop Press

Item	Part No.	Description	Qty
1	N/A	Shop Press Frame	1
2	N/A	Bed Frame	1
3	400-002-003	Bed Support Pin	2
4	400-002-004	Frame Base Channel	2
5	400-002-005	Lower Stabilizer	1
6	400-002-006	Winch	1
7	400-002-007	Cable Sheaves (Pulley)	4
8	400-002-008	Cable	2
9	400-002-009	Pump Platform	1
10	400-002-012	Cylinder Adapter Plate	1
11	H5506	Cylinder, 55-ton	1
12	CH38M	Male Half Coupler, 3/8"	1
13	CS3838	Hydraulic Hose, 3/8"ID	1
14	GW4014	Wet Pressure Gauge	1
15	CF3814	Gauge Adapter	1
16	AP55	Arbor Plates, 55 Ton	1
17	P2001(d)	Pump	1
18	300-002-016	Pump Mounting Hardware Kit	1

TROUBLESHOOTING

A system failure may or may not be the result of a pump malfunction. The following information is intended to be used as an aid in determining if a problem exist.

Symptom	Possible Causes	Corrective Action
Erratic Ram Performance	• Air in system or pump cavitation • External leak • Internal hydraulic leak	• Follow pump instructions for bleeding air • Tighten all connections • Contact authorized Service Center
Pump or ram fails to maintain pressure	• Overload condition • External leak • Internal hydraulic leak • Ram seals leaking • Pump or valve malfunctioning	• Remedy overload condition • Tighten all connections • Contact authorized Service Center • Contact authorized Service Center • Check pump operating instructions
Ram extends partially	• Hydraulic oil level too low in pump • Load is above the capacity of system • Ram is sticking or binding	• Fill and bleed the system • Match the capacity to application • Contact authorized Service Center
Slow ram movement	• Loose connection or coupler • Restricted hydraulic line or fitting • Pump not working correctly • Ram seals leaking	• Tighten connection or coupler • Clean and replace if damaged • Check pump operating instructions • Replace cylinder
Ram leaks hydraulic fluid	• Worn or damaged seals	• Contact authorized Service Center
Ram will not retract or retracts slower than normal	• Linkage binding • Loose couplers • Malfunctioning coupler • Weak or broken retraction springs • Ram damaged internally • Pump reservoir too full	• Lubricate all moving parts • Tighten couplers • Depressurize pump and hose, remove application, then replace a new coupler • Contact authorized Service Center • Contact authorized Service Center • Drain hydraulic fluid to correct level
Motor will not start (Electric pumps)	• No power or wrong voltage • Damaged power cord • Tripped circuit breaker • Loose or faulty wiring	• Check the power supply & voltage • Contact Customer Service • Make sure breaker is of adequate size • Contact Customer Service
Motor cuts out (Electric pumps)	• Extension cord too long • Faulty motor • Overheated motor can trip circuit breaker	• Replace with shorter cord • Replace or repair • Allow motor to cool, reset circuit breaker

TWO YEAR LIMITED WARRANTY

For a period of two (2) years from date of purchase, SFA Companies will repair or replace, at its option, without charge, any of its products which fails due to a defect in material or workmanship under normal usage. This limited warranty is a consumer's exclusive remedy.

Performance of any obligation under this warranty may be obtained by returning the warranted product, freight prepaid, to SFA Companies Warranty Service Department, 10939 N. Pomona Ave., Kansas City, MO 64153. Except where such limitations and exclusions are specifically prohibited by applicable law:

1) THE CONSUMER'S SOLE AND EXCLUSIVE REMEDY SHALL BE THE REPAIR OR REPLACEMENT OF DEFECTIVE PRODUCTS AS DESCRIBED ABOVE.
2) SFA COMPANIES SHALL NOT BE LIABLE FOR ANY CONSEQUENTIAL OR INCIDENTAL DAMAGE OR LOSS WHATSOEVER.
3) ANY IMPLIED WARRANTIES, INCLUDING WITHOUT LIMITATION THE IMPLIED WARRANTIES OF MERCHANTABILITY AND FITNESS FOR A PARTICULAR PURPOSE, SHALL BE LIMITED TO TWO YEARS, OTHERWISE THE REPAIR, REPLACEMENT OR REFUND AS PROVIDED UNDER THIS EXPRESS LIMITED WARRANTY IS THE EXCLUSIVE REMEDY OF THE CONSUMER, AND IS PROVIDED IN LIEU OF ALL OTHER WARRANTIES, EXPRESS OR IMPLIED.
4) ANY MODIFICATION, ALTERATION, ABUSE, UNAUTHORIZED SERVICE OR ORNAMENTAL DESIGN VOIDS THIS WARRANTY AND IS NOT COVERED BY THIS WARRANTY.

Some states do not allow limitations on how long an implied warranty lasts, so the above limitation may not apply to you. Some states do not allow the exclusion or limitation of incidental or consequential damages, so the above limitation or exclusion may not apply to you. This warranty gives you specific legal rights, and you may also have other rights which vary from state to state.