Air Hydraulic Pump Instruction Manual

MODEL: PA7550 & PA7550M

SFA Companies 10939 N. Pomona Ave. Kansas City, MO 64153
Tel: 888-332-6419 * Fax: 816-448-2142
E-mail: sales@bvahydraulics.com Website: www.bvahydraulics.com

Maximum Operating Pressure 10,000 PSI

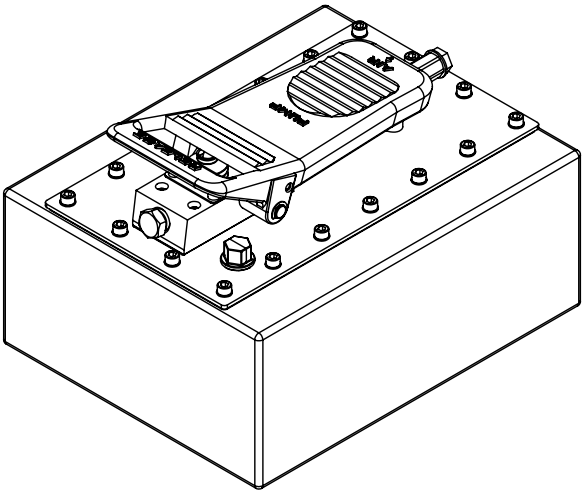

PA7550

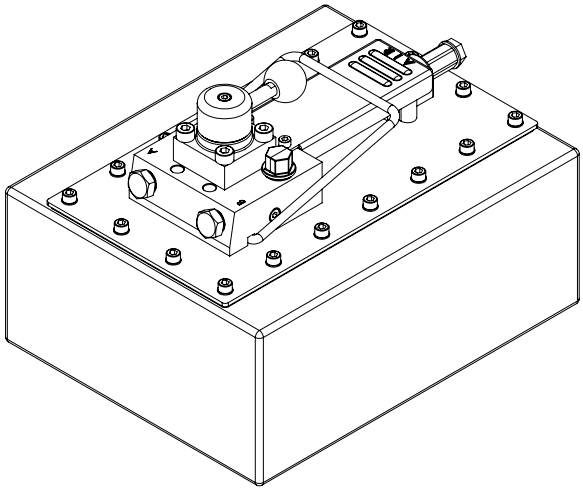

PA7550M

This is the safety alert symbol. It is used to alert you to potential personal injury hazards. Obey all safety messages that follow this symbol to avoid possible injury or death.

Printed in Taiwan

SAFETY AND GENERAL INFORMATION

Save these instructions. For your safety, read and understand the information contained within. The owner and operator shall have an understanding of this product and safe operating procedures before attempting to use this product. Instructions and safety information shall be conveyed in the operator's native language before use of this product is authorized. Make certain that the operator thoroughly understands the inherent dangers associated with the use and misuse of the product. If any doubt exists as to the safe and proper use of this product as outlined in this factory authorized manual, remove from service immediately.

Inspect before each use. It is recommended that, prior to each use, an inspection be done by qualified personnel and that any missing or damaged parts, decals, warning/ safety labels or signs be replaced with BVA Hydraulics authorized replacement parts only. Any pump that appears to be damaged in any way, is worn, leaking or operates abnormally shall be removed from service immediately until such time as repairs can be made. Any pump that has been or suspected to have been subject to a shock load (a load dropped suddenly, causing the system pressure to exceed 10,000 PSI), shall be removed from service immediately until checked out by a BVA Hydraulics authorized service center. Owners and operators of this equipment shall be aware that the use and subsequent repair of this equipment may require special training and knowledge.

PRODUCT DESCRIPTION

BVA Hydraulics Air Hydraulic Pump is engineered to meet most industrial standards for Performance and Safety. It is an air hydraulic pump with 4-way valve. It's unique hydraulic circuit allows quick displacement of hydraulic fluid under no load conditions and easy pumping in loaded conditions. Pump supplies compressed hydraulic fluid to compatible single or double-acting cylinder, anywhere that 10,000 PSI of fluid pressure is needed. It is suited for plant maintenance, production, bolting, vehicle repair, and any task that requires hydraulic pressure from air input. Special skill, knowledge and training may be required for a specific task and the product may not be suitable for all the jobs described above. Unsuitable applications would include applications that call for a device to move, level or support persons, animals, hazardous materials, mobile homes/ dwellings in general, mirrors and/or plate glass, and/or to connect/secure hatches, components, etc. between bulkheads. The user must ultimately make the decision regarding suitability of the product for any given task and assume the responsibility of safety for himself and others in the work area.

WARNING: *To reduce the risk of personal injury and/or property damage, ensure that the rated working pressure of each pressurized attachment be equal to or greater than the rated working pressure developed by the hydraulic pump.*

WARNING: *Always check connections before using. Alteration of these products is strictly prohibited. Use only those adapters and attachments provided and approved by the manufacturer.*

SPECIFICATIONS

Model No.	Valve Style	Usable Oil Capacity (Cu. In.)	Rated Pressure (PSI)	Output Flow Rate (Cu. In./Min.)		Input Air Pressure (PSI)	Oil Output Port Thread	Air Input Port Thread	Weight (Lbs)
				No Load	Loaded				
PA7550	Single Acting	461	10,000	66	11	110 - 175	3/8"-18NPTF	1/4"-18NPT	38.0
PA7550M	Double Acting								41.0

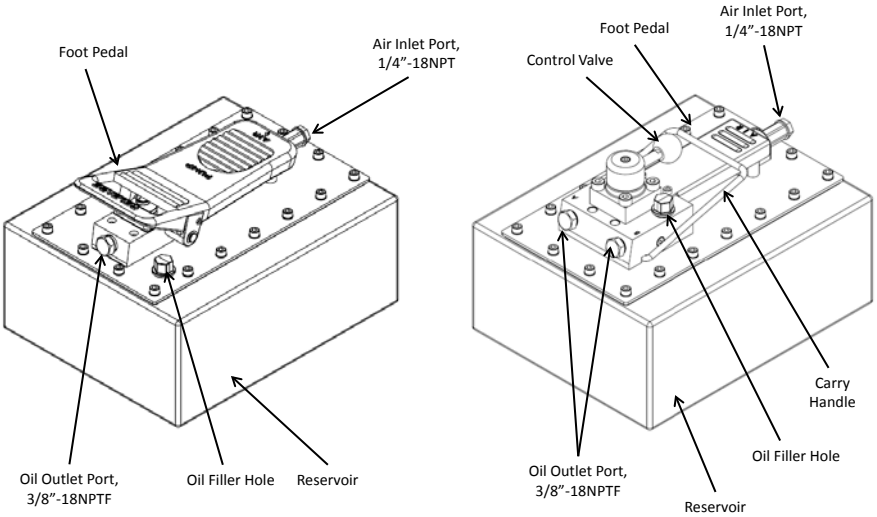

Figure 1 - Model PA7550 & PA7550M Nomenclature

⚠WARNING

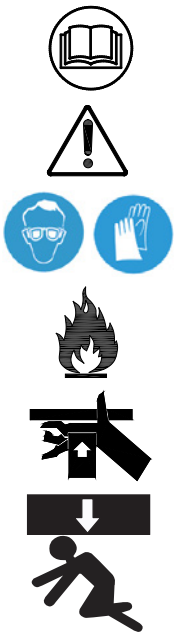

- Study, understand, and follow all instructions provided with and on this device before use.
- No alteration shall be made to this device.
- Always wear protective gear when operating hydraulic equipment.
- Keep hydraulic equipment away from flames and heat. Hydraulic fluid can ignite and burn. Do not operate if leaks are detected.
- Crush Hazard. Keep hands and feet away from loading area. Avoid pinch points or crush points that can be created by the load, cylinder, or any equipment of system.
- To avoid crushing and related injuries: NEVER work on, under or around a lifted load before it is properly supported by appropriate means. Never rely on hydraulic pressure alone to support load.

HYDRAULIC PUMPS

- The user must be a qualified operator familiar with the correct operation, maintenance, and use of pumps. Lack of knowledge in any of these areas can lead to personal injury.
- Do not exceed rated capacity of the pump or any equipment in the system.
- Never attempt to lift a load weighing more than the capacity of the cylinder.
- Burst hazard exists if hose or connection pressure exceeds rated pressure.
- Inspect pump, cylinder, hoses and connections before each use to prevent unsafe conditions from developing. Do not use if damaged, altered or in poor condition. Do not operate system with bent or damaged coupler or damaged threads.
- Never hold or stand directly in line with any hydraulic connections while pressurizing.
- Use gauge or other load measuring instrument to verify load.
- Never attempt to disconnect hydraulic connections under pressure. Release all line pressure before disconnecting hoses.
- Do not subject the pump and its components to shock loads.
- Use only approved accessories and approved hydraulic fluid.
- Never attach ANY component not authorized by manufacturer.
- Always ensure that the chosen application is stable to work on and around.
- Do not connect to application which can return more oil to the reservoir than the pump reservoir can hold.
- Do not connect pump to hydraulic system powered by another pump.
- This device is not suitable for use as support device! As the system load is lifted, use blocking and cribbing to guard against a falling load.
- Clear all personnel before lowering load or depressurizing the system.
- Do not disassemble hydraulic cylinder, refer repairs to qualified, authorized personnel.

HYDRAULIC HOSES & FLUID TRANSMISSION LINES

- Avoid short runs of straight line tubing. Straight line runs do not provide for expansion and contraction due to pressure and/or temperature changes.
- Reduce stress in tube lines. Long tubing runs should be supported by brackets or clips. Before operating the pump, tighten all hose connections with proper tools. Do not overtighten. Connections should only be tightened securely and leak-free. Overtightening can cause premature thread failure or high pressure fittings to burst.
- Should a hydraulic hose ever rupture, burst or need to be disconnected, immediately shut off the pump and release all pressure. Never attempt to grasp a leaking pressurized hose with your hands. The force of escaping hydraulic fluid can inflict injury.
- Do not subject the hose to potential hazard such as fire, sharp objects, extreme heat or cold, or heavy impact.
- Do not allow the hose to kink, twist, curl, crush, cut or bend so tightly that the fluid flow within the hose is blocked or reduced. Periodically inspect the hose for wear.
- Do not pull, position or move setup by the hose.
- Hose material and coupler seals must be compatible with hydraulic fluid used. Hoses also must not come in contact with corrosive materials such as battery acid, creosote-impregnated objects and wet paint. Never paint a coupler or hose.
- FAILURE TO HEED THESE WARNINGS MAY RESULT IN PERSONAL INJURY AS WELL AS PROPERTY DAMAGE.

BEFORE USE

1. Before using this product, read the instruction manual completely and familiarize yourself thoroughly with the product and the hazards associated with its improper use.
2. Know your pump, its limitations and how it operates before attempting to use.
3. Replace shipping plug (red color) with air vent plug (black color) before use.
4. Remove plastic cap from the air inlet port on the end of the pump, then connect with a 1/4" NPT air nipple (not supply with pump). Use teflon tape or similar thread sealant on thread connection.

NOTICE: *When using the teflon tape or pipe thread compound. Tighten securely to prevent accidental removal of compound while in use. Take care not to introduce compound into port orifices.*

OPERATION (for PA7550)

Always monitor pressure, load or position using suitable equipment. Pressure may be monitored by means of an optional manifold and gauge. Load may be monitored by means of a load cell and digital indicator. Correct application position can only be determined by the operator of the equipment.

1. To extend the cylinder, depress on the foot pedal marked "Pump" (horizontal portion) until desired pressure, load or position is reached.
2. To hold the cylinder in position, release the foot pedal to deactivate the pump.
3. To retract the cylinder, depress the release valve by stepping on the foot pedal marked "Release" (raised, stirrup shaped portion). Never operate a pump which is disconnected from application. If operate in this condition, the hose and connections will become pressurized. This increases burst hazard. Damage may occur to pump and its components.

OPERATION (for PA7550M)

WARNING: *To reduce the risk of personal injury and/ or property damage, hydraulic connections must be securely fastened before building pressure in the system. Release all system pressure before loosening any hydraulic connection in the system.*

WARNING: *Always monitor pressure, load or position using suitable equipment. Pressure may be monitored by means of an optional manifold and gauge. Load may be monitored by means of a load cell and digital indicator. Correct application position can only be determined by the operator of the equipment.*

1. Connect air supply to the 1/4" NPT air nipple.
2. Remove manifold plug, connect to hydraulic hoses and suitable application.
3. Shift the valve to desired position. There are three positions available, refer to Figure 2 on below for the flowpath.
4. After shifting the valve, press on the foot pedal until desired pressure, load or position is reached. Always monitor pressure, load or position using suitable equipment. Pressure may be monitored by means of optional manifolds and gauges (contact BVA Hydraulics). Load may be monitored by means of a load cells and digital indicators.

NOTICE: *Do not continue to operate pump after cylinder plunger is fully extended or retracted.*

5. Release the foot pedal will stop the pump flow.

NOTICE: *Both air input ports use a 1/4 NPT air nipple (not included). It is recommended to install an inline air filter upstream from the pump to provide clean, lubricated air. Contact BVA Hydraulics for necessary accessories.*

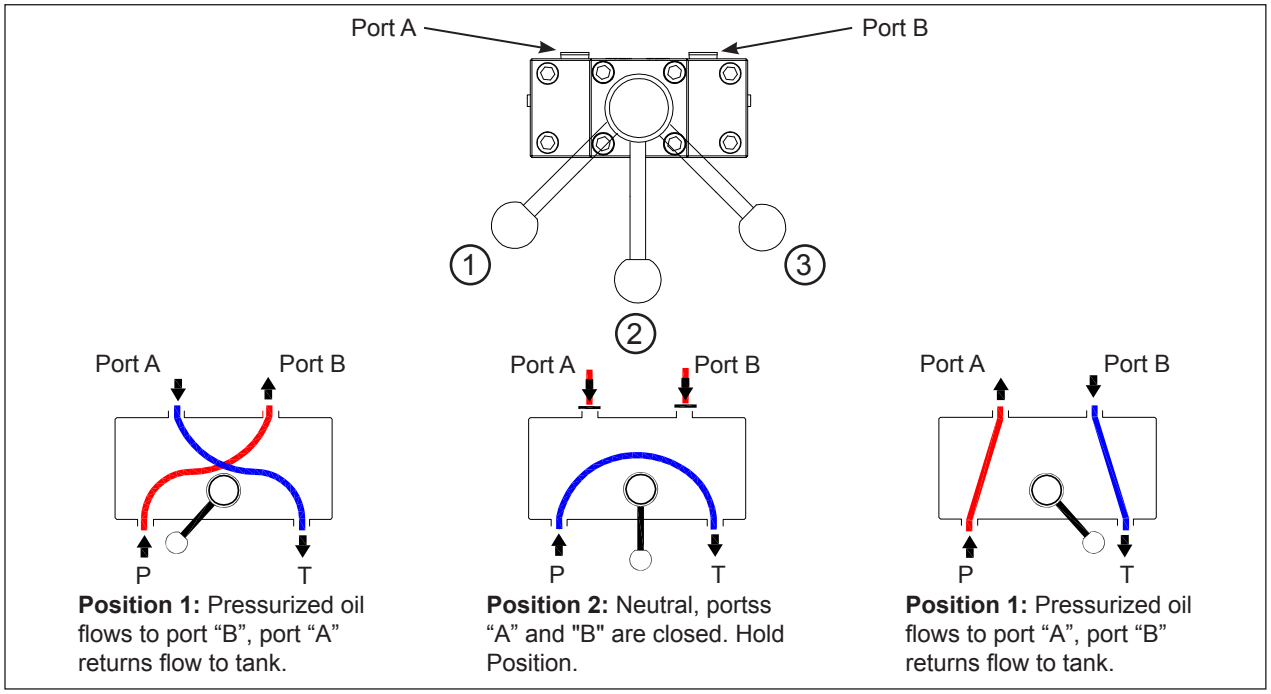

Position 1: Pressurized oil flows to port "B", port "A" returns flow to tank.

Position 2: Neutral, portss "A" and "B" are closed. Hold Position.

Position 1: Pressurized oil flows to port "A", port "B" returns flow to tank.

Figure 2 - PA7550M Flowpath of the valve positions and operations

MAINTENANCE

NOTICE: *Use premium quality hydraulic jack fluid. Never use brake fluid, transmission fluid, turbine oil, motor oil, alcohol, glycerin etc. Use of other than good quality hydraulic oil will void warranty and damage the pump, hose, and application.*

1. Inspect hoses and connections daily. Replace damaged components immediately with BVA Hydraulics replacement parts only.
2. Tighten connections as needed. Use non-hardening pipe thread compound when servicing connections.

Adding Hydraulic Fluid

1. Depressurize and disconnect hydraulic hoses from application.
2. With pump in upright, horizontal position, remove the air vent plug located on the top plate of the reservoir.
3. Use a small funnel to fill reservoir to within 3/4" (19mm) of the opening.
4. Wipe up any spilled fluid and reinstall the air vent plug.

Changing Hydraulic Fluid

1. For best results, change fluid once a year.
2. Repeat step 2 on Adding Hydraulic Fluid, then pour used fluid into a sealable container.
3. Dispose of fluid in accordance with local regulations.
4. Fill with a good quality hydraulic jack oil as recommended above. Reinstall air vent plug.

Lubrication

When pump is operated on daily basis, the manufacturer recommends installing an inline oiler and air dryer. Use SAE grade oil (5W to 30W).

Storage

1. When not in use, depressurize and disconnect hydraulic hoses from application.
2. Wipe clean, thoroughly.
3. Store in clean, dry environment. Avoid temperature extremes.
4. For transportation or long storage, replace the air vent plug with shipping plug.
5. Shield pump with a protective cover.

TROUBLESHOOTING GUIDE

The following information is intended as an aid in determining if problem exists. Pumps should be repaired only by authorized BVA Service Center. For repair service, contact service center in your area.

Symptom	Possible Causes	Corrective Action
Application does not extend, move or respond to pressurized fluid	• Overload condition • Loose couplers • Faulty couplers • Pump malfunction • Inadequate air supply	• Remedy overload condition • Tighten couplers • Replace couplers • Contact service center • Ensure air source can dedicate 7.8 CFM @ 110~175 PSI
Application responds to pressurized fluid, but system does not maintain pressure	• Overload condition • Pump or valve malfunction • Application/connection leaking	• Remedy overload condition • Contact Service Center • Replace application/connection
Application responds slower than normal	• Loose connection or coupler • Restricted hydraulic line or fitting • Application/connection leaking	• Tighten connection or coupler • Clean and replace if damaged • Replace application/connection
Application does not return fluid to pump (i.e. cylinder will not retract)	• Malfunctioning coupler, damaged application	• **Secure load by other means**. **Depressurize** pump and hose, remove coupler and/or application, then renew or replace
Application does not fully extend (cylinder or spreader)	• Reservoir overfilled • Fluid level in pump is low	• **Secure load by other means**. **Depressurize** pump and hose, remove application, then drain fluid to proper level • **Secure load by other means**. **Depressurize** pump and hose, remove application, then fill fluid to proper level
Poor performance	• Fluid level in pump is low	• Ensure proper fluid level

Air Hydraulic Pump Service Parts

MODEL: PA7550

SFA Companies 10939 N. Pomona Ave. Kansas City, MO 64153
Tel: 888-332-6419 * Fax: 816-448-2142
E-mail: sales@bvahydraulics.com Website: www.bvahydraulics.com

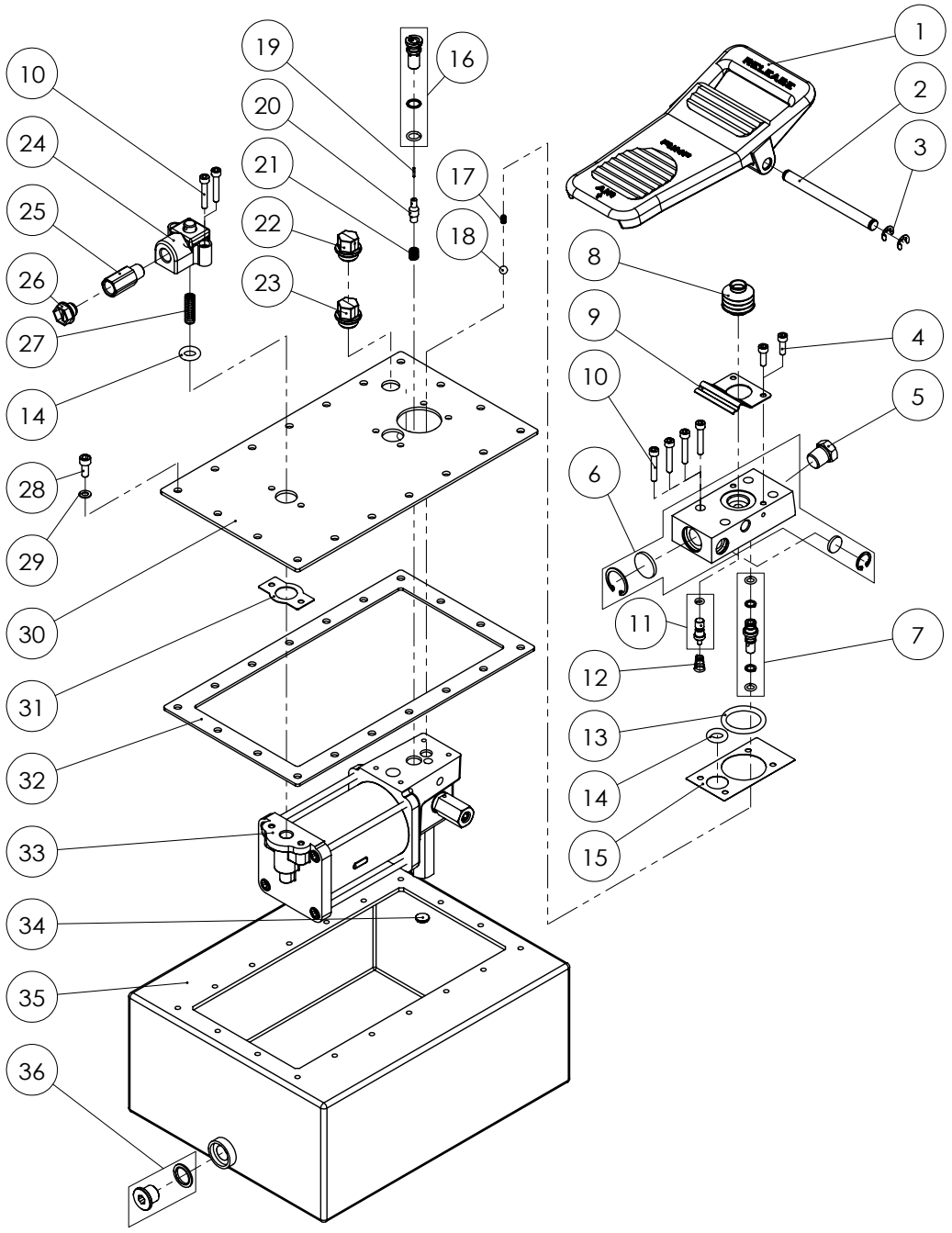

Air Hydraulic Pump Service Parts

MODEL: PA7550

SFA Companies 10939 N. Pomona Ave. Kansas City, MO 64153
Tel: 888-332-6419 * Fax: 816-448-2142
E-mail: sales@bvahydraulics.com Website: www.bvahydraulics.com

No.	Part No.	Description	Qty.
1	A57-4-6003-100	Foot Pedal Assy.	1
2	A57-6-2003-102	Foot Pedal Axle	1
3	677-5-0070-101	E-clip	2
4	649-1-0050-055	Screw	2
5	D05-6-1001-106	Nut	1
6	A57-4-4001-500	Oil Outlet Base Assy.	1
6.1	N/A	Oil Outlet Base	1
6.2	A17-6-1002-103	Silencer	1
6.3	666-5-0250-108	C-clip	1
6.4	666-5-0160-107	C-clip	1
6.5	A57-6-3007-105	Silencer	1
7	A57-4-4002-108	Oil Outlet Valve Assy.	1
8	A57-6-6005-106	Dust Cap	1
9	A57-6-5101-107	Leaf Spring	1
10	649-1-0050-046	Bolt	6
11	A57-4-3001-101	Release Bar Assy.	1
12	*	Bevel Compressing Spring	1
13	*	O-ring	1
14	*	O-ring	2
15	*	Pad	1
16	A57-4-3004-107	Release Base Assy.	1
17	512-2-0043-108	Compressing Spring	1
18	601-7-0009-001	Steel Ball	1
19	*	Release Neddle	1
20	A57-4-3003-105	Release Valve Assy.	1
21	512-2-0061-100	Compressing Spring	1
22	A57-3-1900-109	Air Vent Assy. - Black	1
23	A57-3-5007-107	Plug Assy. - Red	1
24	A57-4-5001-101	Air Entrance Valve Seat Assy.	1
25	A57-6-2062-108	Connector	1
26	A17-6-1105-103	Plug	1
27	512-2-0092-101	Compressing Spring	1
28	649-1-0060-040	Bolt	18
29	*	Copper Washer	18
30	A57-6-6008-102	Oil Tank Cover	1
31	*	Pad	1
32	*	Pad	1
33	A57-3-1027-103	Air Pump Assy., Refer to Page #10	1
34	H23-6-1000-102	Magnet	1
35	A57-3-6002-102	Reservoir	1
36	E05-3-9901-103	Drain Plug Assembly	1
*	A57-3-9927-109	Repair Kit	1

Air Hydraulic Pump Service Parts

MODEL: PA7550M

SFA Companies 10939 N. Pomona Ave. Kansas City, MO 64153
Tel: 888-332-6419 * Fax: 816-448-2142
E-mail: sales@bvahydraulics.com Website: www.bvahydraulics.com

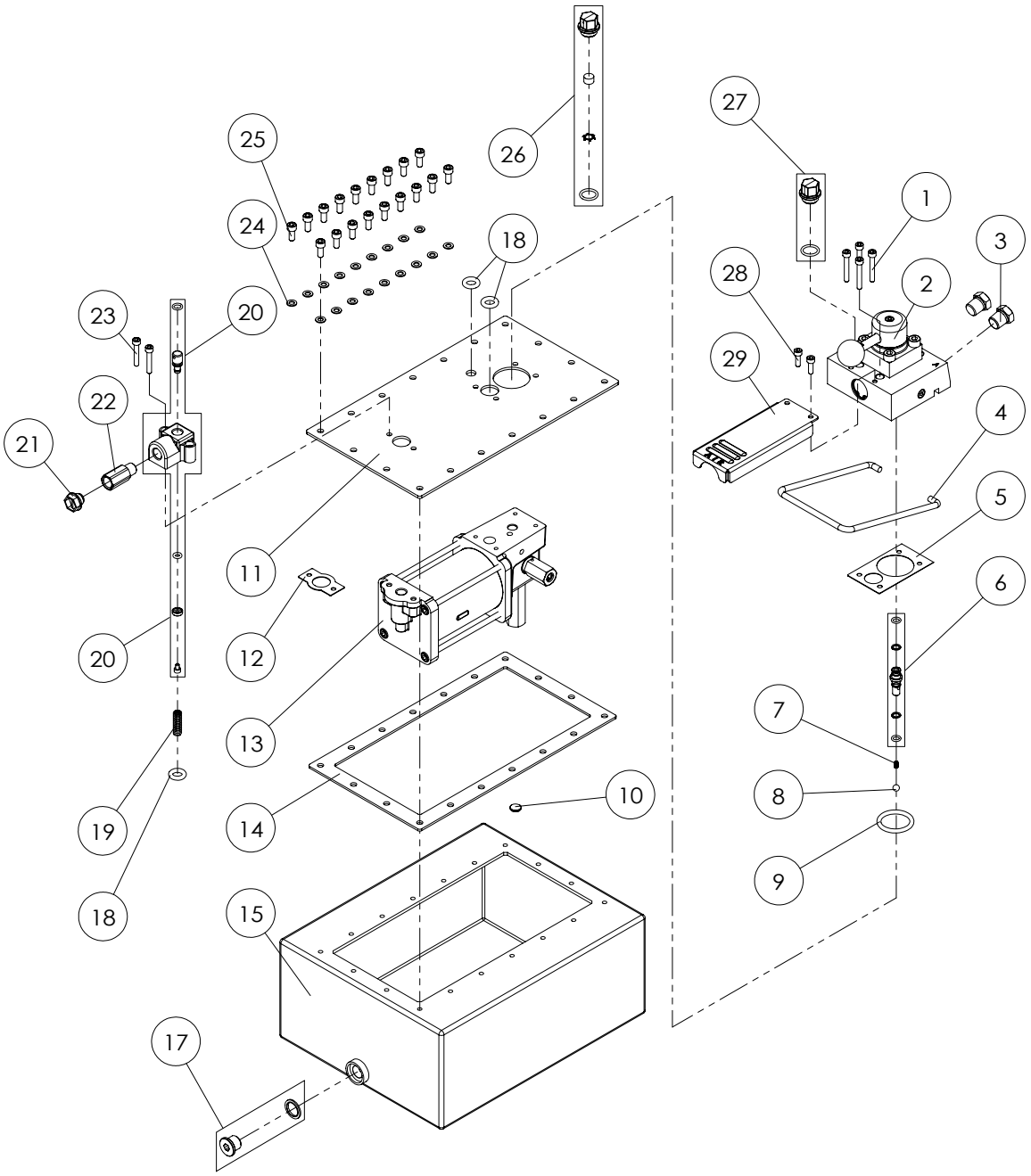

Air Hydraulic Pump Service Parts

MODEL: PA7550M

SFA Companies 10939 N. Pomona Ave. Kansas City, MO 64153
Tel: 888-332-6419 * Fax: 816-448-2142
E-mail: sales@bvahydraulics.com Website: www.bvahydraulics.com

No.	Part No.	Description	Qty.
1	649-1-0050-101	Bolt	4
2	A67-3-1014-102	Control Valve Assy., Refer to Page #11	1
3	D05-6-1001-106	Nut	2
4	A67-6-1011-104	Handle	1
5	*	Pad	1
6	A57-4-4002-108	Oil Outlet Valve Assy.	1
7	512-2-0043-108	Compressing Spring	1
8	601-7-0009-001	Steel Ball	1
9	*	O-ring	1
10	H23-6-1000-102	Magnet	1
11	A67-6-1017-106	Oil Tank Cover	1
12	*	Pad	1
13	A67-4-0005-102	Air Pump Assy., Refer to Page #10	1
14	*	Pad	1
15	A57-3-6002-102	Reservoir	1
17	E05-3-9901-103	Drain Plug Assembly	1
18	*	O-ring	3
19	512-2-0092-101	Compressing Spring	1
20	A57-4-5001-101	Air Entrance Valve Seat Assy.	1
21	A17-6-1105-103	Plug	1
22	A57-6-2062-108	Connector	1
23	649-1-0050-046	Bolt	2
24	*	Copper Washer	18
25	649-1-0060-040	Bolt	18
26	A57-3-1900-109	Air Vent Assy. - Black	1
27	A57-3-5007-107	Plug Assy. - Red	1
28	649-1-0050-055	Screw	2
29	A67-6-1007-103	Foot Pedal	1
*	A67-3-9903-103	Repair Kit	1

Air Hydraulic Pump Service Parts

MODELS: A57-3-1027-103 & A67-4-0005-102

SFA Companies 10939 N. Pomona Ave. Kansas City, MO 64153
Tel: 888-332-6419 * Fax: 816-448-2142
E-mail: sales@bvahydraulics.com Website: www.bvahydraulics.com

No.	Part No. for Model A57-3-1027-103 (PA7550)	Part No. for Model A67-4-0005-102 (PA7550M)	Description	Qty.
1	N/A		Valve Base	1
2	*		Washer	2
3	A57-6-1003-107		Cylinder	1
4	A57-6-1002-105		Cylinder Cover	1
5	649-1-0060-122		Hex Bolt	4
6	A17-4-2100-500		Air Piston Assy.	1
7	512-2-0410-017		Compressing Spring	1
8	A57-6-1014-102		Cover	1
9	A27-3-2200-102	A57-3-1011-108	Piston Assy.	1
10	A27-6-2023-205	A57-6-2023-108	Bushing	1
11	*		Back-Up Ring	1
12	*		U-Cup	1
13	A57-6-1016-106		Washer	1
14	A58-6-1013-107	A59-6-1013-105	Cylinder	1
15	*		Special Washer	1
16	520-8-0134-101		Filter	1
17	A57-5-1017-102		Oil Entrance Valve	1
18	*		Special Washer	2
19	601-7-0008-009		Steel Ball	1
20	A59-3-1018-106		High Pressure Valve Assy.	1
21	601-7-0006-005	N/A	Steel Ball	1
22	503-9-0050-106	N/A	Steel Ball Block	1
23	644-1-0060-05311	N/A	Screw	1
*	A57-3-9916-104		Repair Kit	1

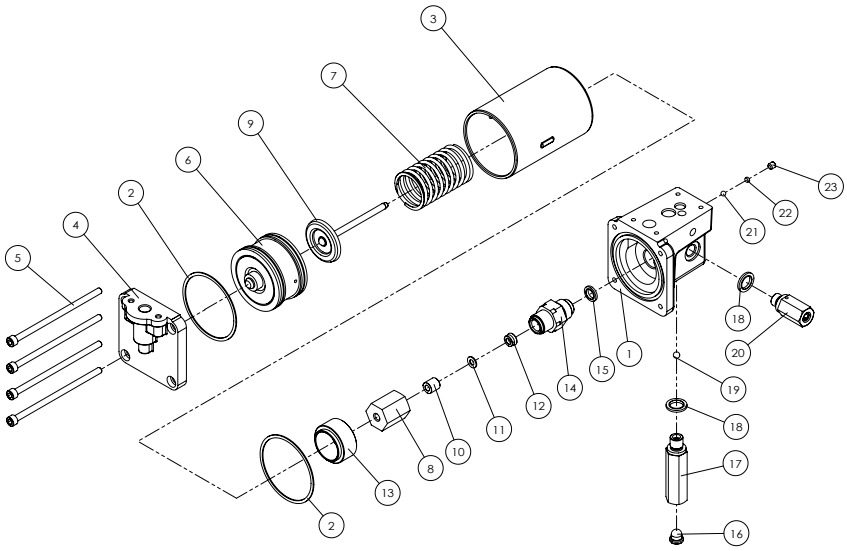

Air Hydraulic Pump Service Parts

MODEL: A67-3-1014-102

SFA Companies 10939 N. Pomona Ave. Kansas City, MO 64153
Tel: 888-332-6419 * Fax: 816-448-2142
E-mail: sales@bvahydraulics.com Website: www.bvahydraulics.com

No.	Part No.	Description	Qty.
1	E05-6-1008-109	Handle	1
2	A67-6-1012-106	Operation Bar	1
3	641-1-0098-103	Screw	2
4	649-1-0080-003	Screw	4
5	601-4-0030-095	Spring Pin	1
6	A67-6-1001-202	Oil Outlet Valve	3
7	606-3-0008-101	Spring Washer	3
8	*	Back-up Ring	3
9	*	O-ring	3
10	649-1-0050-055	Screw	1
11	A67-6-1005-109	Control Valve Cover	1
12	644-1-0060-071	Screw	1
13	A67-6-1006-101	Bearing Washer	2
14	623-6-2542-104	Bearing	1
15	*	O-ring	1
16	A17-6-1002-103	Silencer	1
17	666-5-0250-108	C-clip	1
18	N/A	Valve Base	1
19	N/A	Control Valve Base	1
20	A67-4-1003-103	Control Valve Group	1
20.1	*	O-ring	2
20.2	N/A	Control Valve Group	1
21	512-2-0046-104	Compressing Spring	2
22	601-7-0006-005	Steel Ball	2
*	A67-3-9940-109	Control Base Assy Repair Kit	1

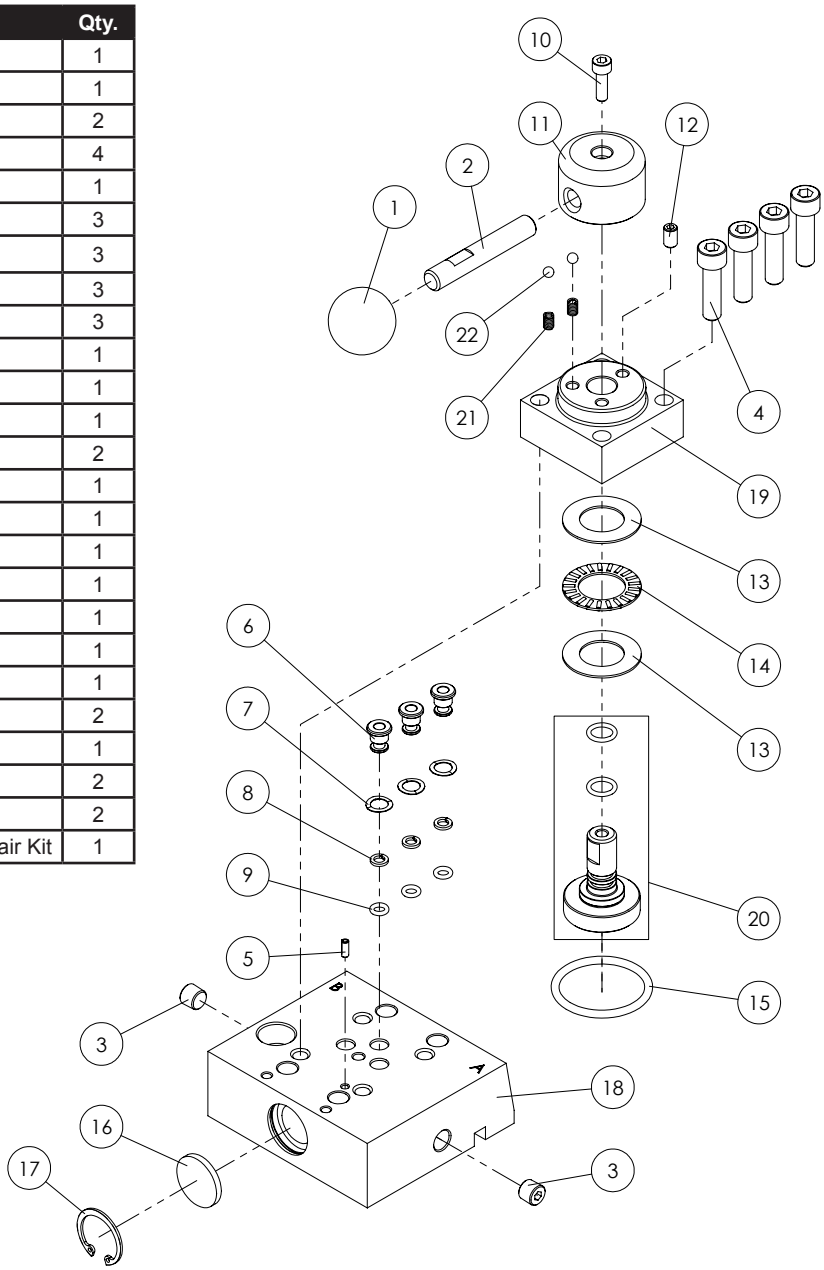

LIMITED LIFETIME WARRANTY

BVA Hydraulics®, represented in the United States by SFA Companies [“SFA”] warrants this product to be free from defects in material and workmanship for the life of the product as long as the original purchaser owns the product. The warranty is non-transferable and is subject to the terms, exclusions, and limitations described below:

- Damaged components, including but not limited to bent rams, dented or crushed cylinder walls, broken welds or couplers as well as worn out seals, o-rings and springs are the result of misuse and not covered by warranty and BVA Hydraulics will not provide any warranty credit for such damaged components.
- This warranty does not cover ordinary wear and tear, overloading, alterations (including repairs or attempted repairs not performed by BVA Hydraulics or one of its authorized personnel), improper fluid use, or use of the product in any manner for which the product was not intended or the use of which is not in accordance with the instructions or warnings provided with the product.
- In the unlikely event that a BVA Hydraulics product fails due to material defect in workmanship, you may contact SFA for disposition. In such cases, the customer’s sole and exclusive remedy for any breach or alleged breach of warranty is limited to the repair or replacement of the defective product.
- Under no circumstances is BVA Hydraulics liable for any consequential or incidental damage or loss whatsoever.
- THIS WARRANTY IS LIMITED TO NEW PRODUCTS SOLD THROUGH AUTHORIZED DISTRIBUTORS AND OTHER CHANNELS DESIGNATED BY BVA HYDRAULICS. NO AGENT, EMPLOYEE OR OTHER REPRESENTATIVE OF BVA HYDRAULICS IS AUTHORIZED TO MODIFY THIS WARRANTY.
- THE FOREGOING IS EXCLUSIVE AND IS IN LIEU OF ALL OTHER EXPRESS AND IMPLIED WARRANTIES, INCLUDING BUT NOT LIMITED TO THE IMPLIED WARRANTIES OF MERCHANTABILITY AND FOR A FITNESS FOR A PARTICULAR PURPOSE.
- Components not manufactured by BVA Hydraulics including certain motor systems, gasoline engines, and others are not covered by this warranty and instead are covered by the manufacturer’s separate manufacturer’s warranty provided in the package.
- BVA Hydraulics’ liability in all cases is limited to, and will not exceed the purchase price paid for the product.

SFA Companies
10939 N. Pomona Ave. Kansas City, MO 64153
Tel: 888-332-6419
E-mail: sales@bvahydraulics.com